ACCOYA COLOR SIDING - SWITZERLAND

ACCOYA SIDING USA

Technical information - North America

PERFORMANCE • FINISH • SUSTAINABILITY •

TABLE OF CONTENTS

Ventilated siding system 02
Horizontal siding 04
Vertical and diagonal siding 05
Handling and machining 07
Fire behaviour 09
Coating 10
Wood information guide 11
Get in touch 11

VENTILATED SIDING SYSTEM

A ventilated siding system is characterized by continuous ventilation behind the siding which ensures rain water and condensation behind the siding to be removed and for the insulation to retain its effectiveness.

Joints

Accoya is very dimensionally stable. This stability allows for siding boards to be butt jointed. However, spacing of ⅛" is often appropriate to allow for tolerance in cutting and installation on site and for drainage of water away from end grains, reducing risk of staining.

When joints are left open:

- use a UV resistant breather membrane
- protect furring with a suitable weather resistant joint tape
- Insert vermin mesh (typically for a joint > 13⁄32")

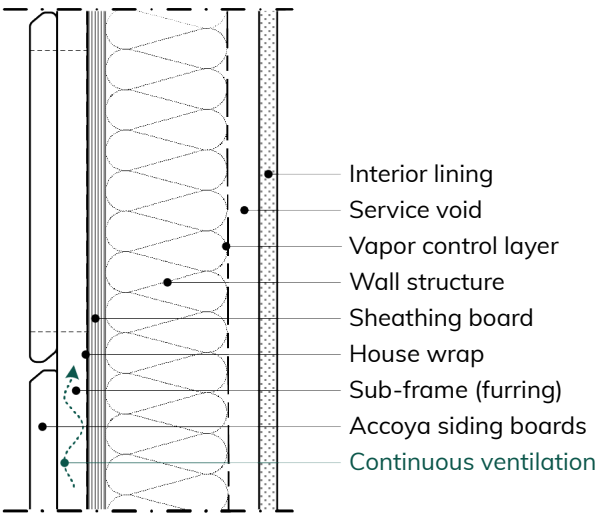

Important design considerations

The recommended cavity depth depends on the annual rainfall at location:

- ¼” minimum in areas with an average annual rainfall of less than 20”
- ⅜” minimum in areas with an average annual rainfall of 20” to 60”
- ½” minimum in areas with an average annual rainfall of more than 60”
- ½” minimum also applies to all coastal areas (CZ50) and sites prone to heavy wind-driven rain
- ¾” cavity may be used to allow for possible field-installation tolerances

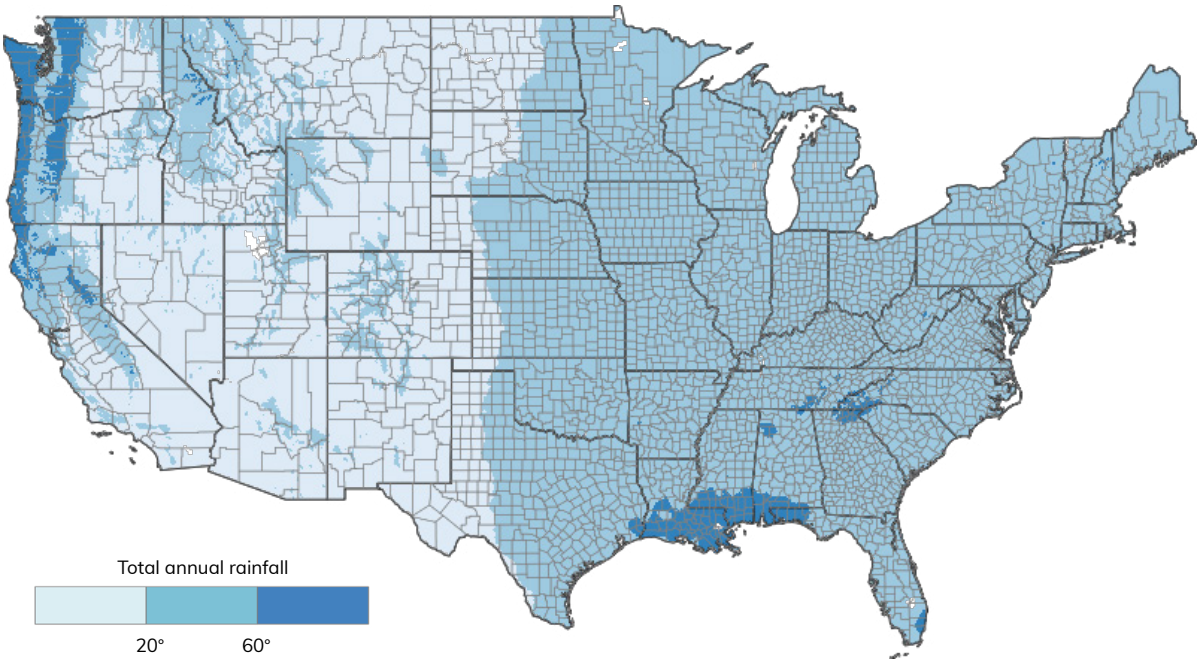

The map above illustrates the distribution of these rainfall areas. For accurate data in your region, please check **www.ncei.noaa.gov/access/us-climate-normals/** (choose ‘Annual/Seasonal’ and ‘2006-2020’).

Further design recommendations:

- Allow for sufficient ventilation in - and outlets at top/bottom (at least 1/32 in 2 per ft^2 siding)
- Use screening to prevent vermin intrusion
- Design for furring strips, flashings and weeps to prevent water intrusion
- If necessary, use additional outdoor caulks or sealants around windows and doors
- Trim:
  - extending down to a roof or deck requires a gap of at least 2” to avoid wicking
  - should be at least 6” above grade
- **Do not** fit boards flush to masonry or brickwork; leave a ¼” gap to avoid trapped water
- Avoid installing siding in the ‘splash zone’ (between ground level and 8” to 10”) because of a staining risk and reduction of the coating service life
- Applying a gravel section below the siding is recommended
- Consider increasing the speed of installing Accoya siding boards by milling a crusher bead into shiplap or tongue and groove profile

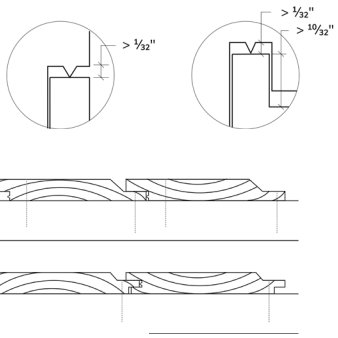

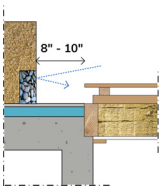

VENTILATED SIDING SYSTEM

Sub-frame

- Minimum furring dimensions 1½“ x 1½” unless fully supported by a structural substrate sufficiently thick to hold the required fastener length
- Maximum sub-frame distance (on center):
  - 24” when applied over wood based sheathing
  - 16” if installed without sheathing

HORIZONTAL SIDING

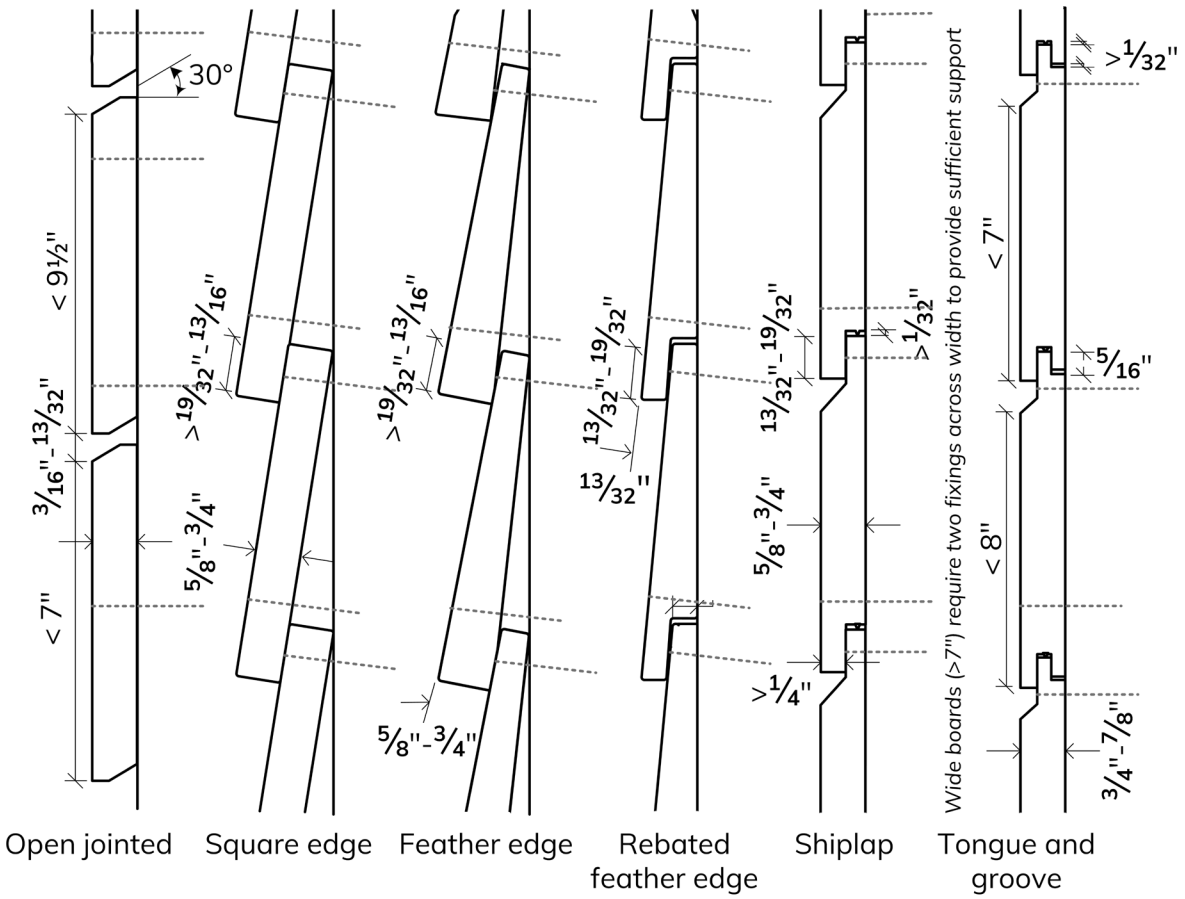

Visible fastening

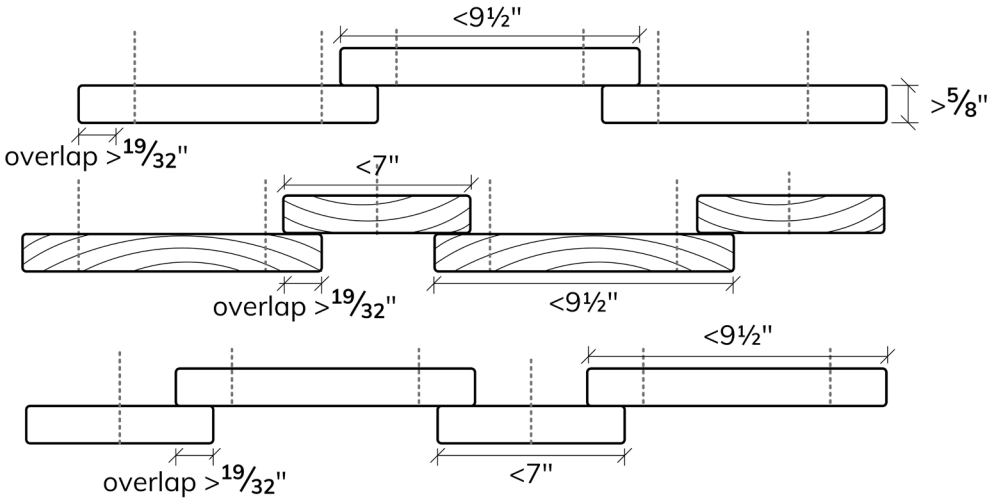

- *Fixing used to install the top board must never pass through the underside board*
- *Chamfering board ends to shed water outward is recommended*
- *Wide boards (>7") require two fixings across width to provide sufficient support*

Hidden fastening

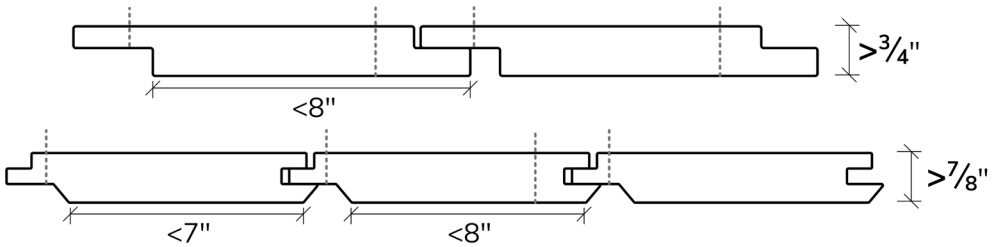

- Use material of at least durability class 1 or 2
- Be aware of the risk of staining Accoya boards when using pressure treated or wood species prone to bleeding; in case of a risk of leaching, apply a barrier between the sub-frame battens and the Accoya siding boards, for example butyl tape or Protectowrap joist tape™

VERTICAL AND DIAGONAL SIDING

Fasteners

- Use ring shank or other improved nails
- Stainless steel 304 or 316 strongly recommended
- Holes pre-drilled:
  - 1/32" less than nail ⌀ or
  - to 80% of screw shank ⌀
- Point side penetration into the substructure:
  ≥ 6 x d (ring shank)
  ≥ 12 x d (smooth)
- Check the screw-holding strength of furring chosen (if not wood)

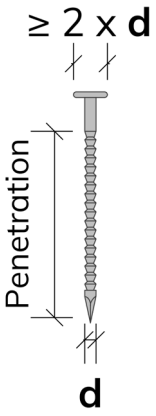

Do not:

- Use staples or T-nails
- Drive the nail/screw heads into the board
- Use galvanized or zinc plated fasteners or accessories
- Install siding in direct contact with concrete, stucco, masonry, top soil, mulch patios and/or roofs

Placement

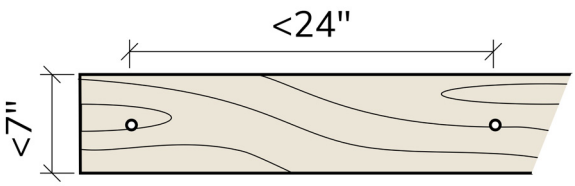

Single fixing

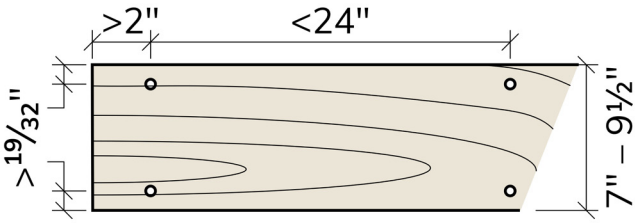

Double fixing

Vertical siding sub-frame

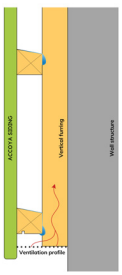

Double furring

- Use a double sub-frame where horizontal furring is fixed to vertical counter furring or ¼" spacers
  - Note that as the horizontal furring is not fully supported, the minimum dimension is 1½" x 1½"
- Water penetration at the end grain of vertical furring should be avoided by applying a suitable sealer
- Horizontal furring should be chamfered at the top side, shedding water <u>into</u> the cavity (away from the siding boards)
- The lowest horizontal furring should slant inward at the bottom, creating a drip lip at the intersection with the counter battens

Single furring

- If a single sub-frame with only horizontal furring isused, additional ventilation measures need to be made by:
  - allowing for a cavity depth of at least ½" AND
  - making sufficient cut-outs in the furring OR
  - interrupting the furringat regular intervals, staggered relative to each other
- Single horizontal furring must be chamfered on the top edge to shed any water <u>outwards</u> (away from the structural wall)

HANDLING AND MACHINING

Storage and handling

- Store boards horizontally, in reasonably dry (well ventilated) conditions and lifted clear of the floor
- Center bearers on 30” max and use at least 3 bearers
- Cover the boards with a breathable barrier / “vapor-open” plastic
- Storage at the building site:
  - should be at least 4” above concrete flooring and 1” above ground
  - additional protection from rain with plastic sheets is recommended
  - sufficient ventilation underneath the sheets is required to prevent mould

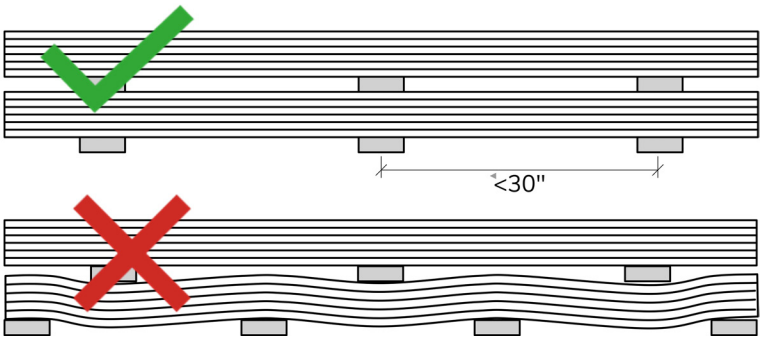

Transport

- In order to prevent damage, especially if coating is to be done on-site, products made of Accoya should be carefully transported and unloaded
- Protection of joints and projecting profiles is especially important

Cutting and machining

General

- Use conventional wood working equipment and tools - Accoya can be compared generally with harder softwood species
- Use carbide-tipped tools or diamond tipped for high(er) volumes
- Make sure that knives are aligned and sharp
- Spindle rotation velocity of 12,000 – 6,000 rpm
- Feed speed 25 – 55 feet per minute
- Use rubber out-feed rollers

Sawing

- Standard techniques such as using backer boards can be used when very fine results are desired

Drilling

- Remove debris for deep drilling

Planing & profiling

- Accoya shavings are fine and may be electrostatically loaded; in case of impression problems, increase the rpm or use anti-friction lubricants

Bending

- Use techniques similar to other softwoods, e.g. kerfing
  Note that Accoya is resistant to setting after steam bending -if left unrestrained by fixings after bending, it will naturally spring back to close to it’s original form
- **Do not** impregnate with ammonia to ease bending

Producing siding boards

Sticker mark removal

The acetylation process can result in discoloration and sticker marks generally up to ¼” in depth, occasionally deeper. Removal of this surface discolouration is not required when using opaque coatings. Discolouration and sticker marks will fade in time proportionate to the level of UV exposure.

For example, when producing a ¾” thick siding board from 1” Accoya, it is recommended to set the bottom knife to remove 1/32” from the back side and remove remaining over thickness from the top side.

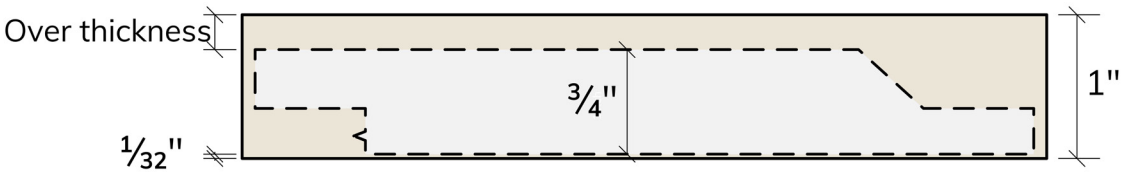

Sawing

The minimum recommended dimensions of the board sections for the various profiles are depicted on the previous page. Re-sawing or ripping Accoya boards can reveal stresses created during drying and processing.

Ripping to create thinner boards is therefore not recommended with boards having an original thicknesses of more than 1½” and should be approached cautiously in all instances.

When using 5/4” rough sawn boards to produce ½” siding, preferably use a thin kerf saw and design for square edge or overlap rather than rebated, or T&G profiles. Nevertheless, these boards will be more prone to damage and slightly more checking. Please note that for very thin boards the batten spacing may need to be reduced to 12” or less.

FIRE BEHAVIOR

California

Product and installation requirements for complying with the 2007 California Building Code (chapter 7A – Materials and construction methods for exterior wildfire exposure):

- Product: Accoya A1 or A2 quality (no knots) with a tested Flame Spread Index of 95;
- Application: horizontal or vertical siding, no ventilation gap. However necessary for complying with this particular building code, excluding continuous ventilation will lead to prolonged wetting of the boards and associated issues (as with other woods);
- Dimension: nominal ≥ 1” thick by ≥ 6” wide;
- Profiles: Tongue & Groove and Shiplap (flat, drop, v-jointed or channel);
- Installation: nailed onto ≥ 7⁄16” thick structural plywood or OSB (PS1 or PS2). Butt joints staggered (minimum 12)”, flush or mitered with no gap and nailed into the substructure. Number of fasteners per board height: at least one for nominal 6” width and two nails for nominal 8” and wider siding (depending on wind load);
- Fasteners are of corrosion-resistant grade (304 or 316 stainless steel). The point side penetration should be at least 1½” (for smooth nails) or 1¼” (for ring shank nails).

Flame spread test

Southwest Research Institute (SwRI) performed Flame Spread Tests and Smoke Developed Tests in accordance with the standard test method for surface burning characteristics of building materials NFPA 255 (ASTM E84, ANSI, UL723 & UBC 8-1).

The conclusion of the Flame Spread Test results is that Accoya wood can be classified within the range of standard timber species and achieves Class C in this US rating system.

Alternative design measures may be taken to achieve a sufficient fire resistance of a wooden façade siding. For example, a charred Accoya board finish can achieve Class B. As there are several proprietary charring processes available in the market each one needs to be evaluated on a case by case basis.

The siding system design must be in accordance with all applicable building regulations and standards. Please check your local building codes to verify the requirements in your area.

COATING

General

- There is no technical need to finish Accoya siding boards
- Uncoated Accoya is susceptible to outdoor weathering, particularly in high rainfall areas
- Mold growth can be avoided by using a suitable outdoor primer addressing mold growth

Preparation

- The Accoya should be dry - moisture content <8%
- Surface must be clean, dry and free from dust and grease
- Finish the panels on all sides before mounting them
- Treat the ends of the boards with end-grain sealer
- For best results, any coating should best be applied industrially
- Round off corners with a radius of at least ⅛”

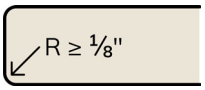

Changed properties

- Due to the hydrophobic nature of Accoya, water-based stains may not penetrate as deep or form as thickly
- The small amount of residual acetic acid may disturb the flow coating process, which can be prevented by adding a alkaline buffer (always below a pH of 9)

Best practices

End seal
All exposed end grain should be coated with an effective end seal

Rounded corners
All Accoya siding boards should be rounded with ⅛” radius corners

Factory coating
Factory application of coatings is recommended to achieve optimum performance

Dark translucent colors
Can provide longer maintenance intervals than lighter shades

Four sides coated
Siding boards should be coated on all 4 sides for superior performance

Longevity
Film forming coatings provide the longest maintenance intervals

Opaque coatings
A stain blocker is recommended

Avoiding discoloration
Discoloration can be avoided by using a high quality UV resistant coating